ekinex
CONTROL YOUR LIVING SPACE

EK-DEL-5PAN-PL EN

Installation Guide



Delégo Panel 5

www.ekinex.com

Welcome!

The Delégo Panel 5" is the new 5-inch model of the Delégo Panel range. It can be powered by IEEE 802.3af PoE or by 12V DC, supports both Ethernet and Wi-Fi 6 connectivity, and provides an RS485 port and a dedicated doorbell input. The panel is installed on a backplate that fits standard flush-mounting boxes, and its frame is interchangeable.

Contents

Before We Start ---------- 2

In the Box ---------- 3

Check Compatibility ---------- 4

Wiring ---------- 7

Installation ---------- 10

Before We Start

Your first time installing this product may take up to 20 minutes.
You'll get faster after each installation.



Warning

Keep the device and its components out of reach of children.
Small parts may pose a choking hazard.

In the Box

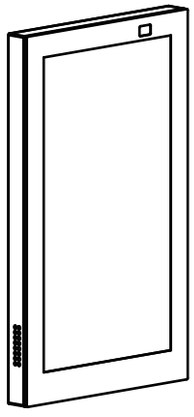

Touch Panel **x1**

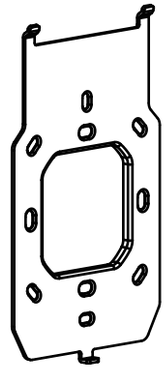

Backplate **x1**

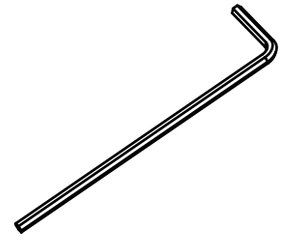

Hex Key **x1**

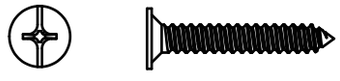

ST3x20 mm Phillips
Self-Tapping Screw **x2**



5-pin Cable **x1**

Check Compatibility

Product Dimensions(mm)

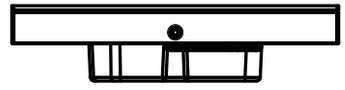

5 BOTTOM VIEW

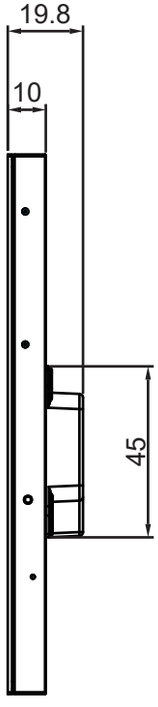

2 RIGHT VIEW

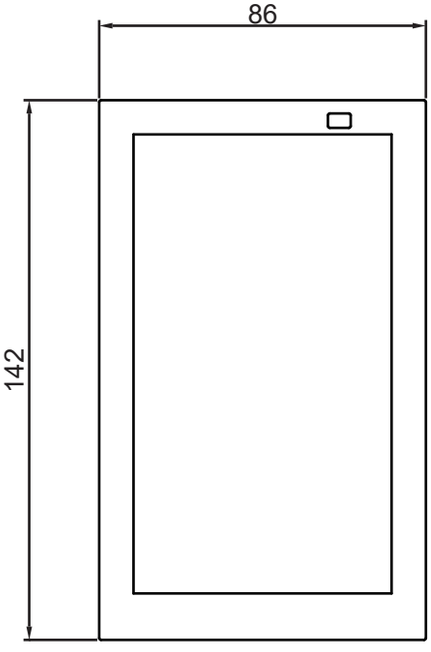

1 FRONT VIEW

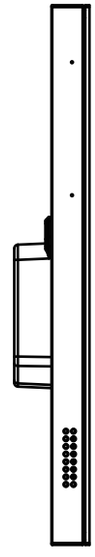

3 LEFT VIEW

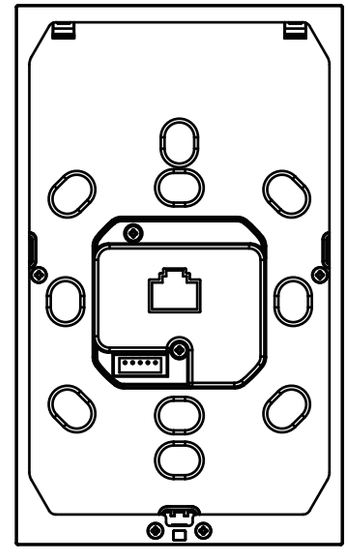

4 BACK VIEW

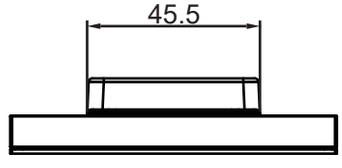

6 TOP VIEW

Working Space

Ensure the installation location provides sufficient space and meets the following requirements.

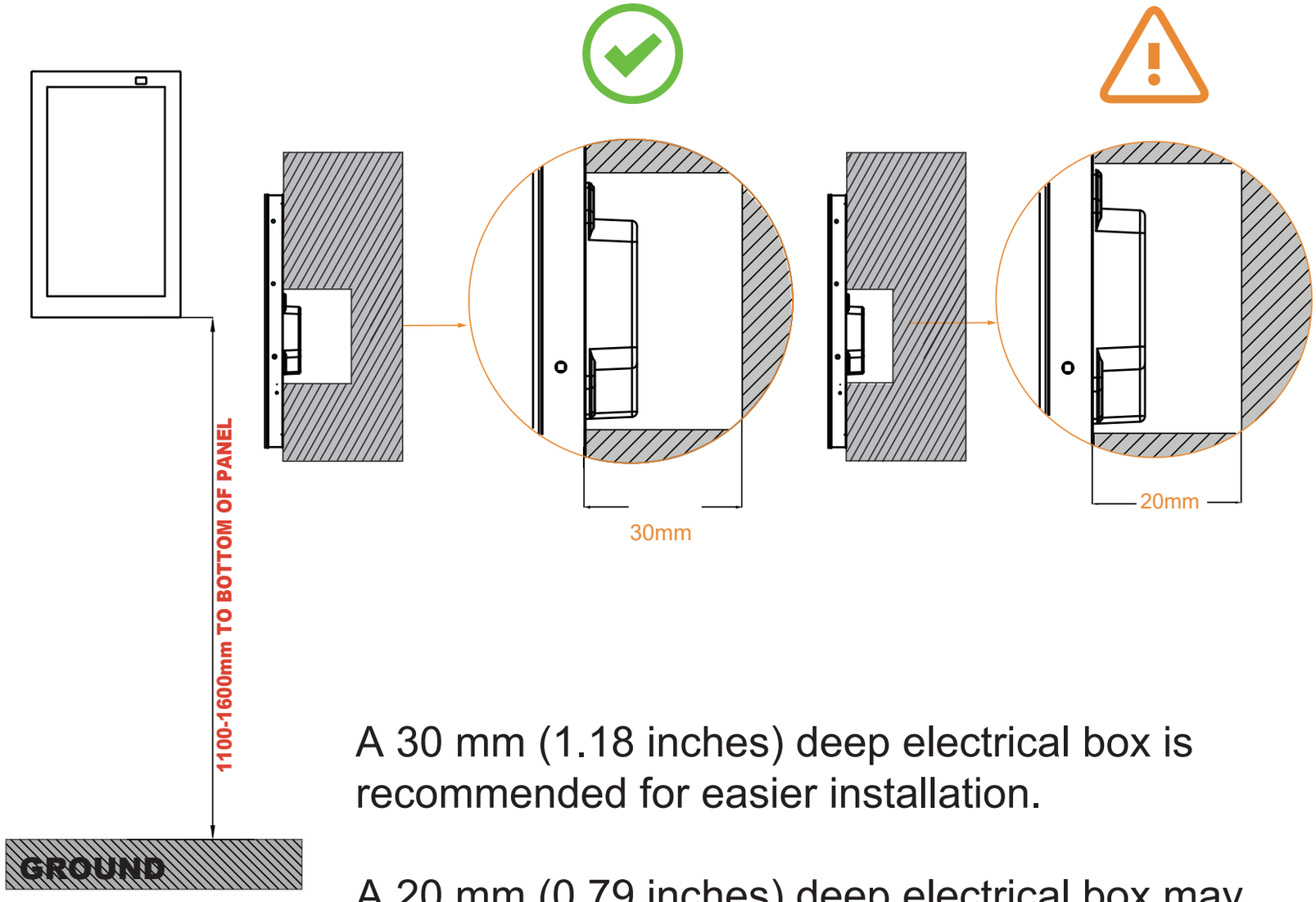

A 30 mm (1.18 inches) deep electrical box is recommended for easier installation.

A 20 mm (0.79 inches) deep electrical box may also be suitable if there is sufficient space to route the wiring into the wall.

Powered by PoE or 12V DC

The panel can be powered by either IEEE802.3af standard PoE or 12V DC power.

Support Wi-Fi and Ethernet Connections

The panel supports both Ethernet and Wi-Fi 6 (IEEE 802.11a/b/g/n/ac/ax). A wired connection is recommended for optimal stability and faster data transfer.

NOTE: When the panel is fitted with a metal frame, the use of Wi-Fi is strongly discouraged. The frame shields the internal antenna and significantly attenuates the wireless signal, which may result in reduced range, unstable operation or loss of connection. In this case, always connect the panel to the network with an Ethernet cable.

Wiring

Rear Connections

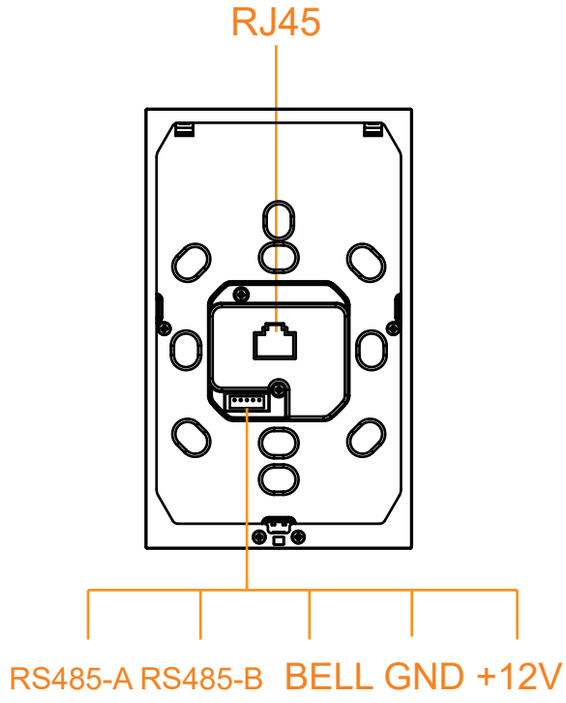

- **+12V / GND terminals:** Connect to a 12VDC power supply.
- **RS485-A / RS485-B terminals:** Connect to an RS485 device.
- **BELL terminals:** Connect to a doorbell.
- **Ethernet port:**
  - When connected to a PoE switch, it provides both power and network connectivity.
  - When connected to a non-PoE switch, it provides network connectivity only.

Prepare the Wires

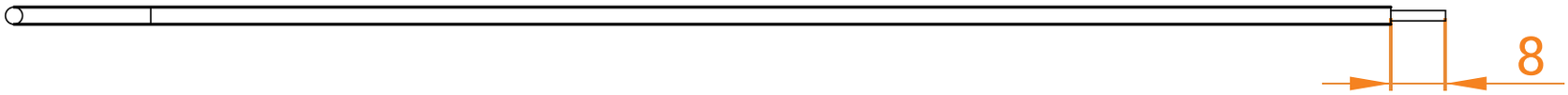

- Use wires sized 1.5mm² - 2.5mm² with stripped and straight ends.
- Strip approximately 8 mm (5/16 inch) of insulation from each wire.

Connect the Wires

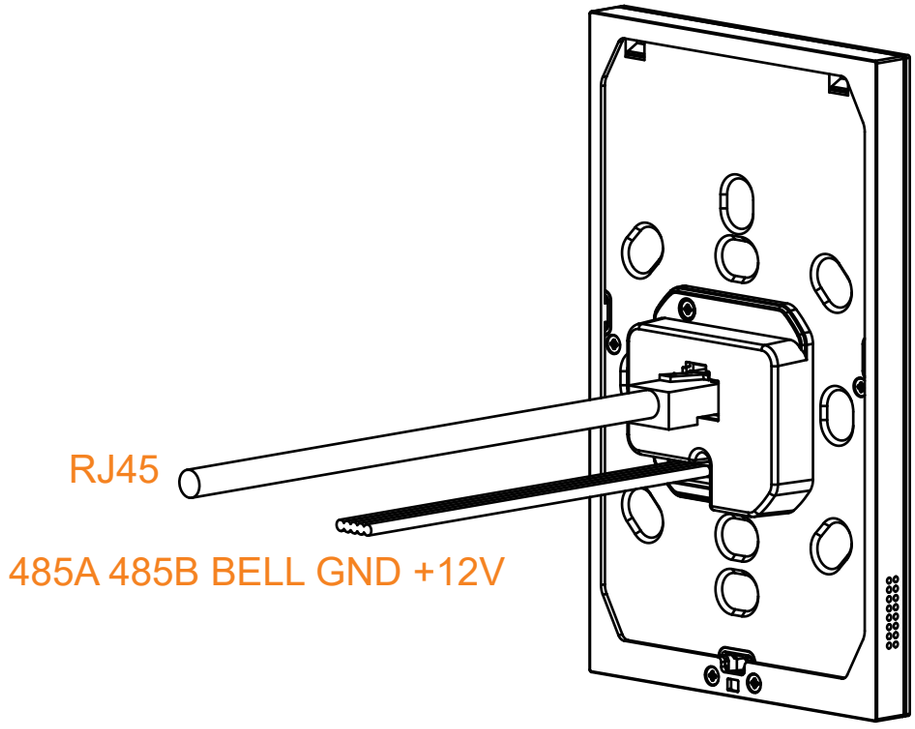

- **Power Supply**
  - **PoE:** Connect an Ethernet cable from a PoE switch to the panel's **Ethernet** port.
  - **12V DC:**
    1. Plug the supplied 5-pin cable into the socket.
    2. Connect the power adapter's positive and negative wires to the **+12V** and **GND** terminals.

- **Wired Network**

  Plug the RJ45 network cable into the **Ethernet** port.

- **RS485 Device**

  1. Plug the supplied 5-pin cable into the socket.

  2. Connect the RS485 device wires to the **RS485-A** and **RS485-B** terminals.

- **Doorbell**

  1. Plug the supplied 5-pin cable into the socket.
  2. Connect the doorbell wire to the **BELL** terminal.

Installation

1.Mount the Backplate

NOTE: Set the electric screwdriver torque to 5 kgf·cm. Do not over-tighten the screws.

- **EU Standard Electrical Box**

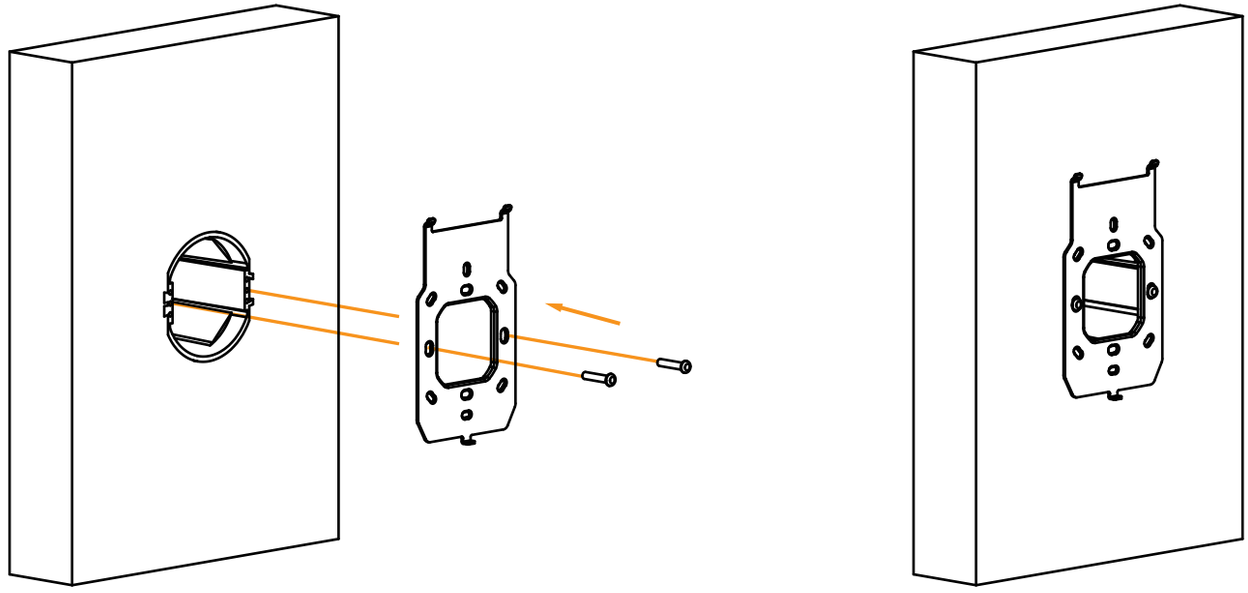

(1) Secure the backplate using two ST3x20 screws.

(2) Make sure the backplate is level and flush with the wall.

- **Italian 503 Standard Box (Vertical Mount)**

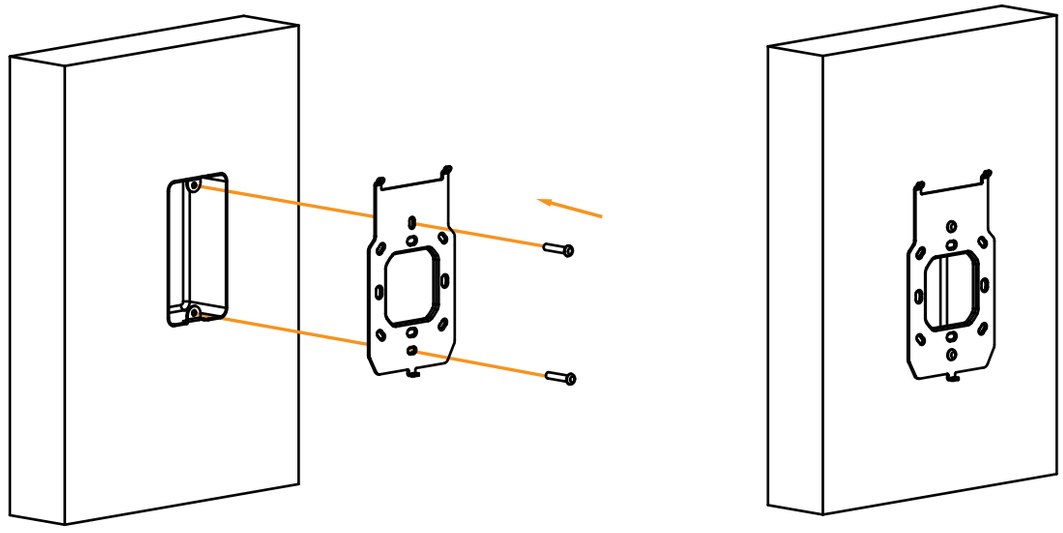

(1) Secure the backplate using two ST3x20 screws.

(2) Make sure the backplate is level and flush with the wall.

2.Install the Panel

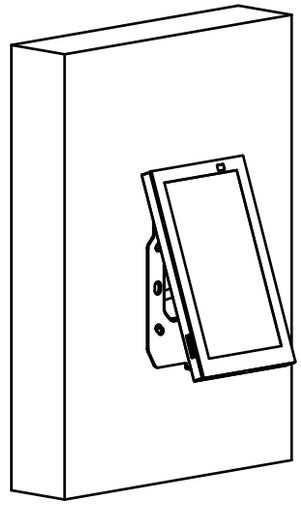

(1) Hold the panel at an angle of approximately 15°, as shown in the illustration.
(2) Align the clips on the backplate with the notches on the panel.

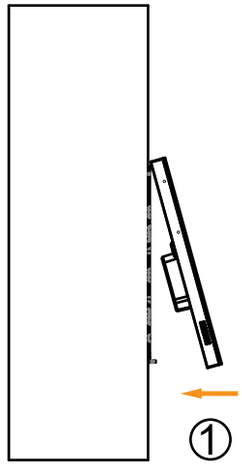

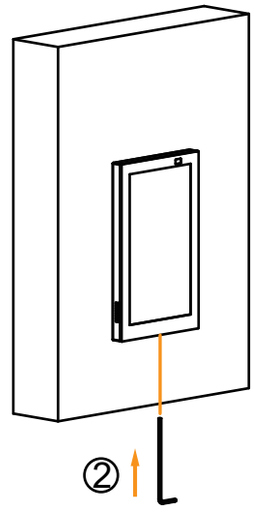

(3) Push the panel towards the bracket until it snaps into place.
(4) Tighten the pre-installed bottom screw using the supplied hex key.
(5) Make sure the panel is securely attached and sits flush with the wall.

If you need to remove the panel

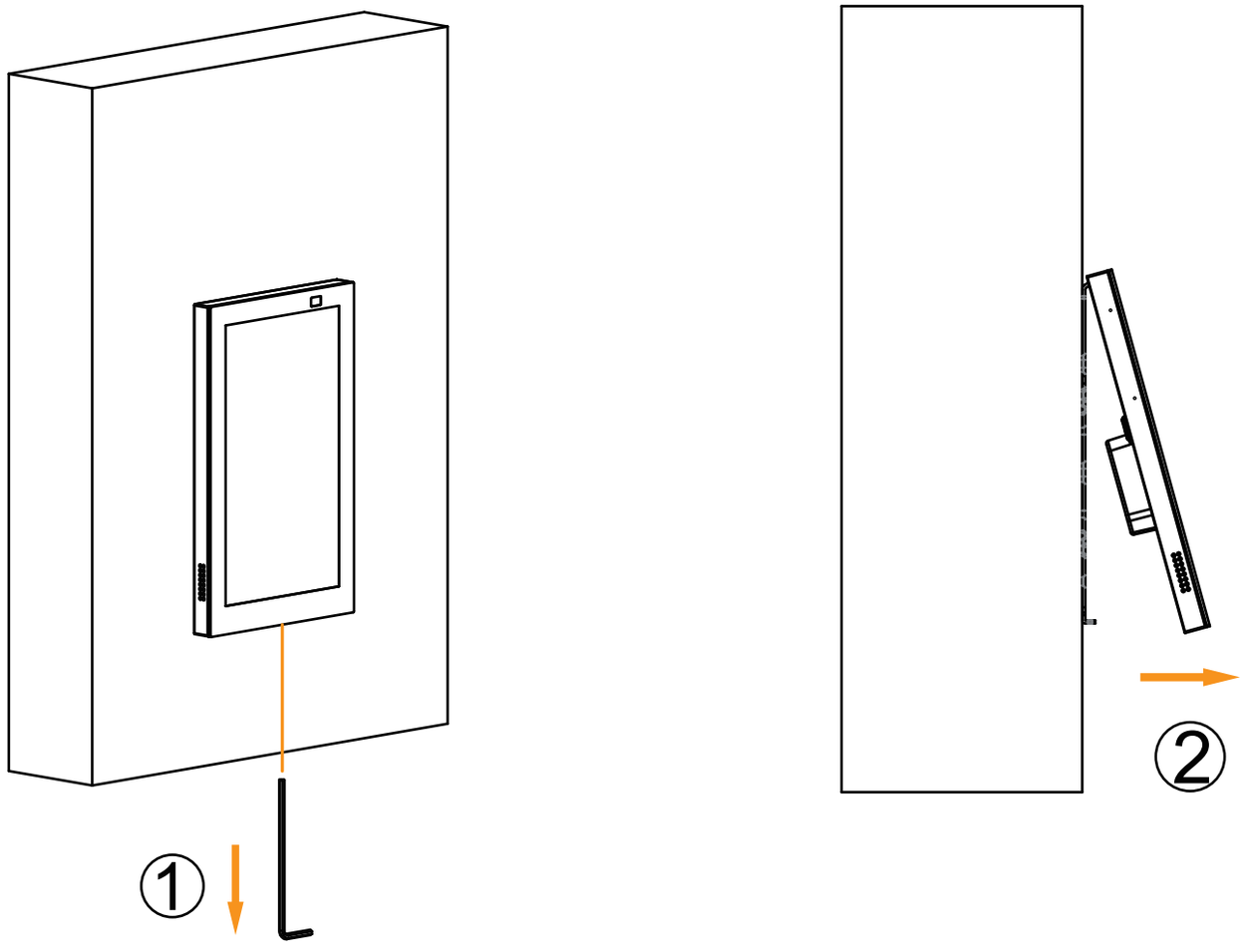

1. Use the hex key to loosen the bottom screw until the lower edge of the panel is released.
2. Pull the lower part of the panel outward to release it.
3. Lift the panel slightly to remove it from the top clips.

Congratulations!

You are done with the Delégo panel installation!

CONTROL YOUR LIVING SPACE

Delégo Panel 5

www.ekinex.com