KNX 90-230 Vac 4-channel phase cut dimmers

Code: EK-GD1-TP-4-HV

KNX CE S TP1 Datasheet STEKGD1TP4HV_EN

KNX bus device with 4-channel phase-cut dimmer function for lighting loads, with power supply voltage 90 - 230 Vac at 50/60 Hz. Use in KNX standard home and building automation systems.

REFLEKGD1TP4HV

Description

The ekinex KNX phase-cut dimmer powered at 90-230 Vac with 4 channels EK-GD1-TP-4-HV allows the brightness control of luminous loads with supply voltage 90 - 230 Vac at 50/60 Hz. The loads that can be used with the dimmer can be: incandescent lamps, mains voltage halogen lamps, dimmable mains voltage LED lamps, dimmable mains voltage LED strips, switching power supplies for dimmable phase cut LEDs. The dimmer cuts the phase in Trailing Edge mode (on the falling edge). The device has an integrated KNX certified bus communication module with SELV 30 Vdc voltage.

The maximum allowed power values, depending on the load, are shown in the table on page 5.

Main functional characteristics

- ON/OFF control and regulation of the luminous intensity of single or group lighting fixtures
- Fade time on and off, minimum and maximum brightness level, linear or logarithmic regulation curve settable via ETS
- Soft or instant on and off, with settable delay
- Configuration of behavior after power recovery, bus ON/OFF, download via ETS
- Channels settable via ETS as independent, in parallel or with copy function from another channel
- Status indication of the outputs through LEDs
- Block function, forced operation, staircase light, scenarios, night, counter and logic functions for each channel, settable by ETS
- Alarm for short circuit, open load and power failure
- Auxiliary output function with status advice via KNX
- Manual command via membrane buttons and for local ON/OFF test of channels 1-2-3-4, also in case of KNX bus absence. A button short press activates/deactivates the load, pressing it for at least 2 seconds causes the load to flash approximately every 1 s

__Note:__ values for output current and nominal power have to be intended as maximum values, depending on the ventilation conditions. The reported values are measured with a room temperature of 40 °C. For electronic loads and/or LEDs whose PFC or harmonic distortion is not known, consider the maximum power halved compared to the nominal value.

Technical data

Inputs

- Power supply: 90 - 230 Vac 50/60 Hz
- Maximum input current: 4 A

Outputs

- Power supply: 90 - 230 Vac 50/60 Hz
- Maximum output current: 1 A per channel

Dimming

- Trailing edge dimming mode with open load control (OPEN CIRCUIT) and short circuit on the load (SHORT CIRCUIT)
- Dimming range: 1-100%

Environmental conditions and other characteristics

- Operating temperature: - 20 ° C ... + 40 ° C
- Storage temperature: - 40 ° C ... + 60 ° C
- Transport temperature: - 40 ° C ... + 60 ° C
- Maximum case temperature (t_c): 65 °C
- Relative humidity: 91% non-condensing
- Protection degree: IP00 (IP20 inside a wall-mounting box or electrical panel)
- Loads and supply wiring: 1.5 mm^2 solid – 2.5 mm^2 stranded (16 - 13 AWG)
- KNX bus wiring: 0.26 ÷ 0.5 mm2 – 23 ÷ 20 AWG
- Stripping: 5.0 - 6.0 mm
- Housing in plastic material
- Device suitable for installation in panels/cabinets 4 UM
- Weight 200 g
- Dimensions (LxHxW): 71x91x62 mm

Protections

- OVP Input voltage peak protection
- RVP Overcurrent protection with 3 A non-resettable fuse
- OCP Output open circuit protection

Control, signaling and connection elements

The device is equipped with a spring clamp for connecting the output loads on 4 channels and the 90 - 230 Vac input power supply (1). There is also a signaling LED for the presence of the power supply (2), a button and LED for each channel (3), for local on / off test in case of KNX bus absence, a KNX programming button with LED (4) and a terminal for connecting the KNX bus (5).

To carry out the local on/off test, briefly pressing the button turns the connected load on or off, while pressing it for at least 2 seconds makes the load flash approximately every 1 s.

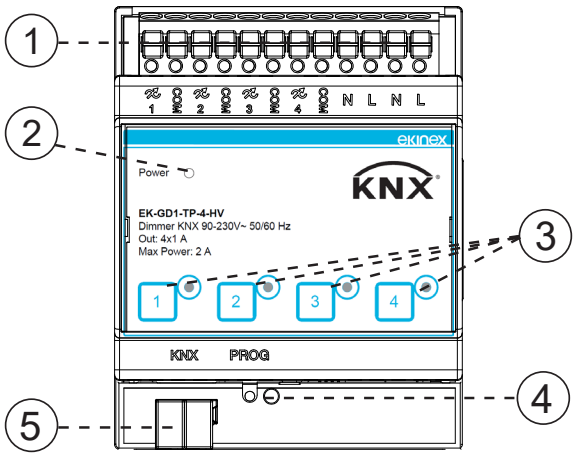

EK-GD1-TP-4-HV

Nr.	Label	Connection
1	-	Power supply and loads clamps
2	Power	Signalling LED
3	Cx	LED and channel x (x = 1,2,3,4) button
4	PROG	KNX programming button and LED
5	KNX	KNX bus terminal

The terminal diagram for power supply and loads is as follows.

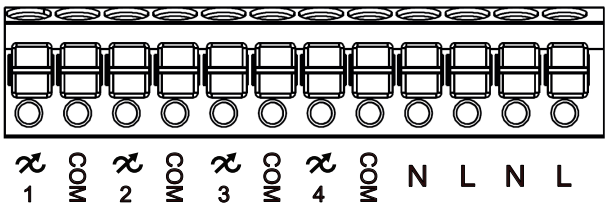

Label	Connection
L	AC input - Live
N	AC input - Neutral
COM	Channel x (x=1,2,3,4) AC output - Neutral
x	Channel x (x=1,2,3,4) AC output - Live

Mounting

The devices have degree of protection IP00 (IP20 inside a wall-mounting box or electrical panel).and are therefore suitable for use in dry interior rooms.

Before removing the device, make sure that inputs, outputs, and the AC power supply have been disconnected.

When assembling, make sure to leave only the front panel accessible; all other sides must not be accessible. For the mounting proceed as follows:

- with the aid of a tool bring the locking device in the fully lowered position (a);
- place the upper edge of the rear inner profile on the upper edge of the rail (b);
- rotate the device towards the rail (c);
- push the locking device upward until it stops (d).

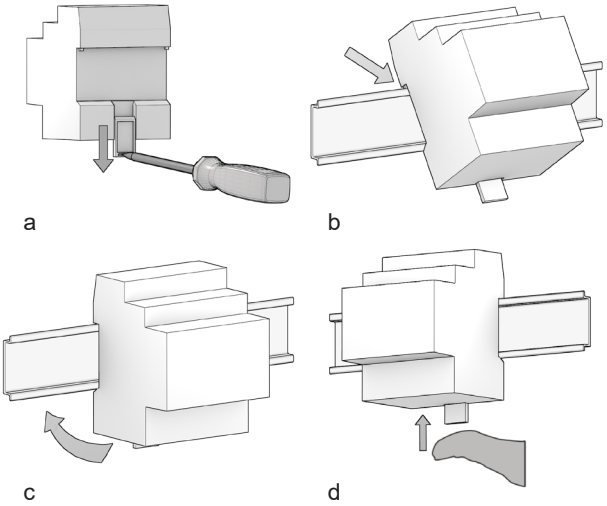

Before removing the device, be sure that inputs, outputs, and the input power supply have been disconnected. Use a screwdriver to slide down the locking device and remove the device from the rail.

Note. *When mounting the device in boards and cabinets it shall be provided the necessary ventilation so that the temperature can be kept within the operating range of the device.*

Setup and installation

The steps to setup the device are as follows:

1. Connect the loads to the AC OUT (-x, N) terminals of the device
2. Connect the KNX bus to the corresponding terminal of the device
3. Connect the 90 - 230 Vac power supply to the AC IN (L, N) terminals of the device

KNX bus line connection

The connection to the bus network takes place via the KNX terminal included in the delivery and inserted in the special housing located on the front of the device in the upper part.

Characteristics of the KNX terminal block

- spring clamping of conductors
- 4 seats for conductors for each polarity
- terminal suitable for KNX bus cable with single-wire conductors and diameter between 0.6 and 0.8 mm
- recommended wire stripping approx. 5 mm
- color codification: red = + (positive) bus conductor, black = − (negative) bus conductor

Warning! *To power the KNX bus lines, use exclusively KNX bus power supplies (e.g. ekinex EK-AB1-TP, EK-AG1-TP or EK-AM1-TP). The use of other power devices can compromise communication and damage the devices connected to the bus.*

Connection of loads and power supply

The connection to the 90-230 Vac 50-60Hz power supply is done via the spring terminals located in the lower part of the device.

Characteristics of the supply and loads terminal block

- Spring tightening of the conductors
- Power and loads wiring: 1.5 mm^2 solid – 2.5 mm^2 stranded – 16 - 13 AWG
- Stripping recommended approx.: 5.0 - 6.0 mm

Warning! *The electrical connection of the appliance must be carried out exclusively by qualified personnel. Incorrect installation can cause electrocution or fire. Before making the electrical connections, make sure you have deactivated the mains voltage.*

Outputs

The cables connected to the outputs must be correctly sized and must be isolated from any wiring or parts with different voltages. The length and type of connection cables must comply with the regulations in force.

Configuration and commissioning

The configuration and commissioning of the device requires the use of the ETS® (Engineering Tool Software) V5 program or later versions. These activities must be carried out in accordance with the design of the building automation system created by a qualified professional.

To configure the device parameters, the corresponding application program or the entire ekinex® product database must be loaded into the ETS® program. For detailed information on the configuration possibilities, consult the application manual of the appliance available on the website www.ekinex.com.

INSTALLATION TECHNICAL NOTES

- **Installation and maintenance must be performed only if the power supply has been turned off.**
- **Installation and maintenance must only be performed by qualified personnel in compliance with current regulations.**
- **The product must be installed inside a wall mounting box or an electrical panel, where it is recommended to install a surge protector.**
- **The product must be protected by a suitably sized fuse.**
- **The product must be protected by a suitably sized magnetothermic switch on the main input line.**
- **The product must be installed in a vertical position with the front / label facing the front or in a horizontal position with the front / label facing upwards. Other product installation positions are not allowed.**
- **Do not connect inductive loads.**
- **Do not connect to UPS (uninterruptible power supply) with output other than Pure Sine Wave. The device is not grounded. Protection from accidental contacts is guaranteed by the casing.**
- **Use in thermally harsh environments could limit the output power.**
- **In the system, keep the 90-230Vac circuits and the non-SELV circuits separate from the SELV circuits at very low safety voltage and from the KNX bus**
- **It is absolutely forbidden to connect, for any reason whatsoever, directly or indirectly, the 90-230Vac mains voltage to the KNX bus or to the loads.**
- **Use double insulated cables.**

Installation diagrams

The device can be installed by wiring the outputs either with a separate COM pole or with a common COM pole. Therefore the following schemes can be created:

1. Outputs with separate COM pole connection

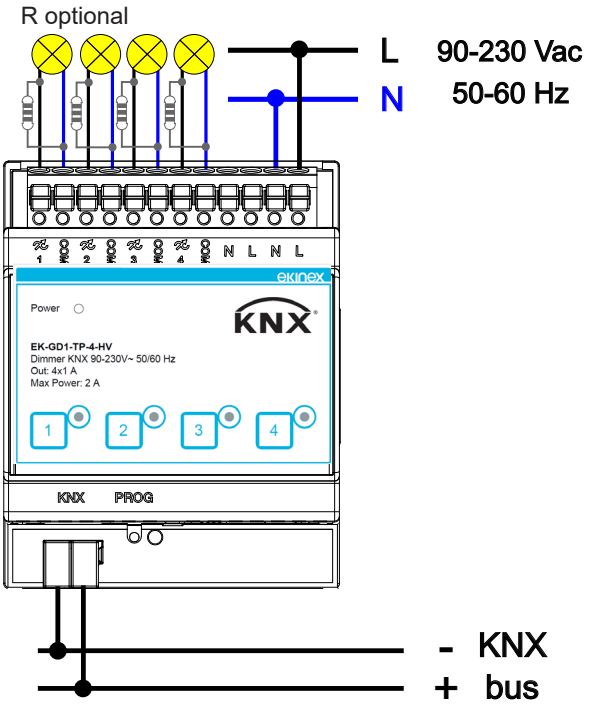

Installation diagram with outputs connected to the separate COM pole

2. Outputs with common COM pole connection

The terminals indicated by the COM label can be used as a common terminal for the loads.

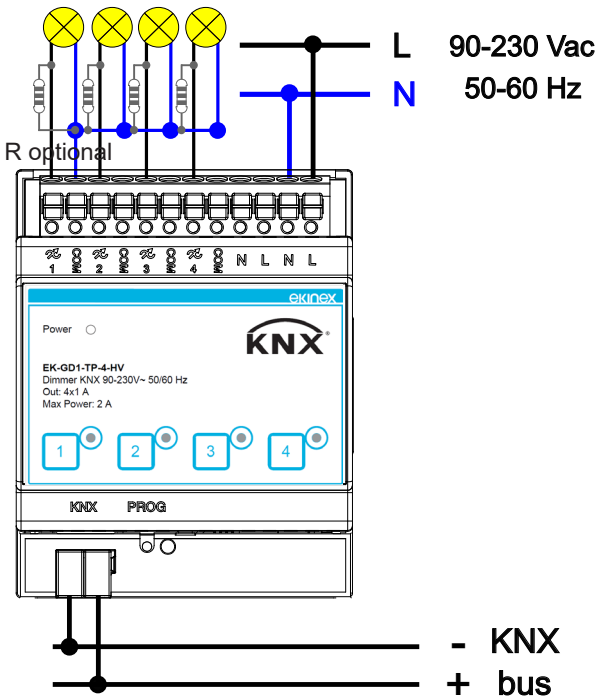

Installation diagram with outputs connected to the common COM pole

Warning! *The input N terminals must never be connected to the COM outputs.*

Warning! *In configuration 2, the internal fuse on the load, which implements overcurrent protection, does not trip.*

The electronic short circuit protection remains functional.

Commissioning

For commissioning the device the following activities are required:

- make the electrical connections as described above;
- turn on the bus power supply;
- switch the device operation to the programming mode by pressing the programming pushbutton (5) located on the front side of the housing. In this operating mode, the programming LED is turned on;
- download into the device the physical address and the configuration with the ETS® program.

At the end of the download the operation of the device automatically returns to normal mode; in this mode the programming LED is turned off. Now the bus device is programmed and ready for use.

Note. *The configuration and commissioning of KNX devices require specialized skills. To acquire these skills, you should attend the workshops at KNX certified training centers.*

Device reset

To reset the device, remove the power from the KNX bus; then press the programming button and, keeping it pressed, restore power to the KNX bus: if, after approximately 10 s, the programming LED flashes quickly, it means that the reset has been carried out. At this point it is necessary to re-address and configure the device via ETS.

Warning! *The reset operation brings back the device to its factory delivery state. The addressing and value of the parameters set during configuration are lost.*

Summary table of load types depending on the input power supply

TE = Trailing Edge

@220 V 50/60 Hz					
SYMBOL	LOAD TYPE	MAX POWER		MODE	CURVE
		SINGLE CHANNEL	SUM OF CHANNELS		
	Halogen or incandescent bulbs (230V ~ 50/60Hz)	230 W	460 W	TE	Linear
	Ferromagnetic transformers (Halogen bulbs at 12/24V ~ 50/60Hz)	Incompatible			
	Electronic transformers (Halogen bulbs 12/24V ~ 50/60Hz)	115 W	330 W	TE	Logarithmic
	Dimmable LED lamps (230V ~ 50/60Hz)	115 W	330 W	TE	Logarithmic
	Lamp power supplies LED (230V ~ 50/60Hz)	115 W	330 W	TE	Logarithmic
	LED strip (230V ~ 50/60Hz)	190 W	460 W	TE	Linear / logarithmic
	Energy saving lamps (ESL/CFL)	Incompatible			

@110 V 50/60 Hz					
SYMBOL	LOAD TYPE	MAX POWER		MODE	CURVE
		SINGLE CHANNEL	SUM OF CHANNELS		
	Halogen or incandescent bulbs (230V ~ 50/60Hz)	110 W	220 W	TE	Linear
	Ferromagnetic transformers (Halogen bulbs at 12/24V ~ 50/60Hz)	Incompatible			
	Electronic transformers (Halogen bulbs 12/24V ~ 50/60Hz)	55 W	110 W	TE	Logarithmic
	Dimmable LED lamps (230V ~ 50/60Hz)	55 W	110 W	TE	Logarithmic
	Lamp power supplies LED (230V ~ 50/60Hz)	55 W	110 W	TE	Logarithmic
	LED strip (230V ~ 50/60Hz)	110 W	220 W	TE	Linear / logarithmic
	Energy saving lamps (ESL/CFL)	Incompatible			

Warning! Never connect the transformer without first having connected the load on the secondary, to avoid overvoltages that are destructive to the appliance.

Dimensions [mm]

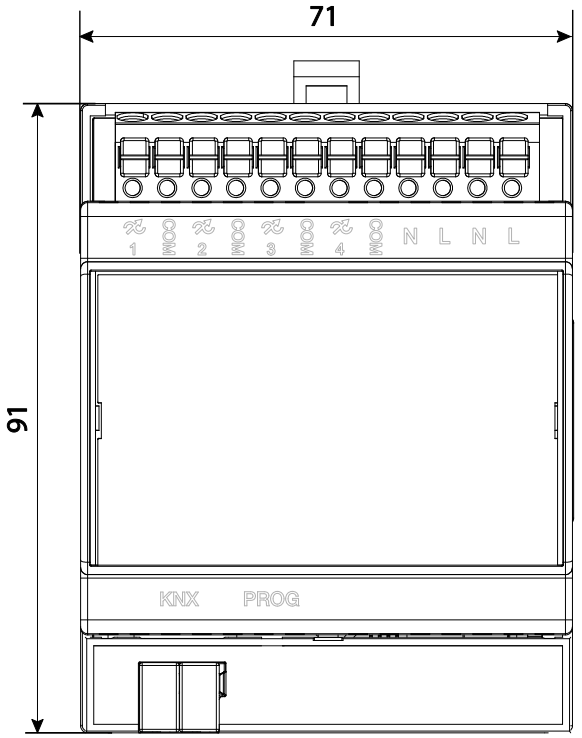

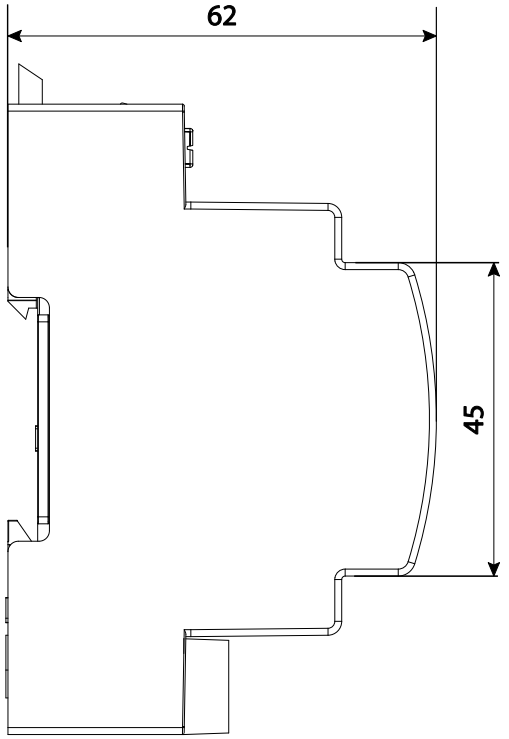

Marks

- KNX
- CE: the device complies with the Electromagnetic Compatibility Directive (2014/30/EU), the Low Voltage Directive (2014/35/EU) and the RoHS 2 Directive (2011/65/EU).
- Reference Standards: EN 63044-5-1:2019, EN 63044-5-2:2019, EN 63044-3:2017, EN 62368-1:2020.

Maintenance

The device is maintenance-free. To clean use a dry cloth. It must be avoided the use of solvents or other aggressive substances.

Disposal

At the end of its useful life the product described in this datasheet is classified as waste from electronic equipment in accordance with the European Directive 2012/19/EU (WEEE recast), and cannot be disposed together with the municipal undifferentiated solid waste.

Warning! Incorrect disposal of this product may cause serious damage to the environment and human health. Please be informed about the correct disposal procedures for waste collecting and processing provided by local authorities.

Document

This technical datasheet refers to the A1.0 release of the ekinex® device code. EK-GD1-TP-4-HV and is available for download on the website www.ekinex.com in PDF format (Portable Data Format).

Product code	Application program (## = release)	Communication objects (nr. max)	Group addresses (nr. max)
EK-GD1-TP-4-HV	APEKGDXTPXHV##.knxprod	102	102

Warnings

- Installation, electrical connection, configuration and commissioning of the device can only be carried out by qualified personnel in compliance with the applicable technical standards and laws of the respective countries
- Opening the housing of the device causes the immediate end of the warranty period
- In case of tampering, the compliance with the essential requirements of the applicable directives, for which the device has been certified, is no longer guaranteed
- ekinex® KNX defective devices must be returned to the manufacturer at the following address: EKINEX S.p.A. Via Novara 37, I-28010 Vaprio d'Agogna (NO) Italy

Other information

- This datasheet is aimed at installers, system integrators and planners
- For further information on the product, please contact the ekinex® technical support at the e-mail address: support@ekinex.com or visit the website www.ekinex.com
- Each ekinex® device has a unique serial number on the label. The serial number can be used by installers or system integrators for documentation purposes and has to be added in each communication addressed to the EKINEX technical support in case of malfunctioning of the device
- KNX® and ETS® are registered trademarks of KNX Association cvba, Brussels

© EKINEX S.p.A. The company reserves the right to make changes to this documentation without notice.