ekinex

CONTROL YOUR LIVING SPACE

KNX access control system: MIFARE® RFID card reader and card holder pocket

Codes: EK-TO2-TP-... / EK-TI2-TP-...

CE UK CA

KNX S TP1 X

Datasheet STEKTO2TI2TP_EN

KNX bus devices with access control function for presence detection in hospitality-oriented environments. Use in KNX standard building automation systems.

REFLEKTO2TI2TP

Description

The Ekinex® EK-TO2-TP and EK-TI2-TP KNX access control devices with RFID technology enable presence detection in hospitality-oriented environments. Both products can manage hospitality guest cards, based on system codes, reservation and check-in/check-out period, service cards depending on time slots and passwords. The EK-TO2-TP card reader with backlit display allows the card to be read by placing it in front of the reader, at a maximum distance of 20 mm, and enables access following validation of the card according to the configured authorisations. The EK-TI2-TP card holder pocket is designed to perform presence authorisation following the insertion of the transponder card in a slot at the top of the device. Both devices can be installed on a 2 or 3-module wall-recessed box, are available in white or black colour and must be completed with the Deep series support and plate. They also have a KNX bus communication module and are compatible with Ekinex Deep and ERA series mechanics, with a 60 x 60 mm window; they are powered at SELV voltage via the KNX bus and require an auxiliary power supply of 12 ÷ 24 Vac or 12 ÷ 32 Vdc.

Note. *The devices can be completed with a 60 x 60 mm window plate (plastic, aluminium or Fenix NTM®) of the Deep series, to be ordered separately. For more information, see the ekinex® product catalogue or go to www.ekinex.com.*

Main functional characteristics

- 30 Vdc power supply from KNX bus, max. current required 10 mA from bus (typical), max 25 mA
- Auxiliary power supply 12 ÷ 24 Vac or 12 ÷ 32 Vdc, absorption 3mA @24V standby, 20mA relays ON, 3mA @12V standby, 32mA relays ON
- Antenna with MIFARE 13.56 MHz RFID technology; max. distance for card detection from front panel: 20 mm
- Guest management of the accommodation facility based on reservation and check-in/out period; Service user management based on time slots, card levels, and master key function, alarm management
- Presence detection and communication with the system supervision system via KNX bus
- Status and scenarios sending to the KNX bus based on guest or service card validation
- LED control via ETS objects
- KNX Secure protocol
- 2 outputs with monostable relays, programmable based on card validation or as actuators activated by KNX telegrams: OUT1 for electric lock control (in the case of the reader), room load control (for card holder), or general use; OUT2 for courtesy light or general use
- Output functions: control of lights, motorized drives, and ON/OFF valves; independent channels or with copy function; logic, object comparison, and arithmetic functions; blocking and override functions; timing: delay on and off, staircase light functions, and scenarios; energy and operating hours counter; Automatic control of motorized drives for protection against weather conditions (rain, wind, frost)
- Relay output characteristics: Max. current (for resistive load): 5A 250Vac/30Vdc; Max. switching current: 5A; Max. power 1250VA/150W
- 2 NO digital inputs for potential-free contacts, connection of traditional buttons (for switching, dimming, or roller shutter/awning); Scene recall and storage; Lock and shift register function
- Test mode for verifying LED and relay operation

<u>EK-TO2-TP (external reader)</u>

- Display with RFID detector (not backlit) and backlit symbols: DND (Do Not Disturb, red LED), MUR (Make Up Room, green LED), RGB LED for general functions, bell button with white LED
- Virtual presence function

<u>EK-TI2-TP (card holder pocket)</u>

- Red LED for DND (Do Not Disturb) signaling, RGB LED for general functions, green LED for MUR (Make Up Room) signaling
- Configurable card extraction delay, for courtesy light management

Warning! *In order to supply power to access control devices, we recommend the use of stabilised power supplies instead of transformers. If it is decided to supply the devices with AC power, it is important to remember that transformers for loads with discontinuous power supply CANNOT be used. It is recommended to use an appropriate power supply/transformer to power the electric lock, as the power consumption of the electric lock is usually not known in advance.*

Warning! *When dimensioning the system (number of power supplies to be used) it should be remembered that each access control device absorbs up to 0.5W peak.*

Other features

- Plastic housing
- Connection to bus line via KNX terminal
- Flush-mounted execution
- Protection degree IP20 (installed)
- Climatic classification 3K5 (indoor use, dry) and mechanical classification 3M2 (according to EN50491-2)
- Dimensions (LxHxW): 80 x 80 x 35 mm (for EK-TO2-TP), 80 x 80 x 41 mm (for EK-TI2-TP)
- Weight approx. 50 g (with mounting bracket)

Environmental Conditions

- Operating temperature: - 5 ... + 50°C
- Storage temperature: - 25 ... + 55°C
- Transport temperature: - 25 ... + 70°C
- Relative humidity: 95% non-condensing

Delivery

The delivery includes a terminal for connection to the KNX bus line, a plastic bracket for mounting on a round or square box (hole spacing 60 mm) and two pairs of screws.

Finishing plate

The button has to be completed with an ekinex® plate made of plastic, metal or Fenix NTM®. The plate must have (at least) a 60 x 60 mm window and is used in combination with a plastic adapter for Deep or Surface series mounting.

Control, signalling and connection elements

All devices are equipped with terminals for connecting the KNX bus line, terminals for auxiliary power supply and for connecting inputs/outputs.

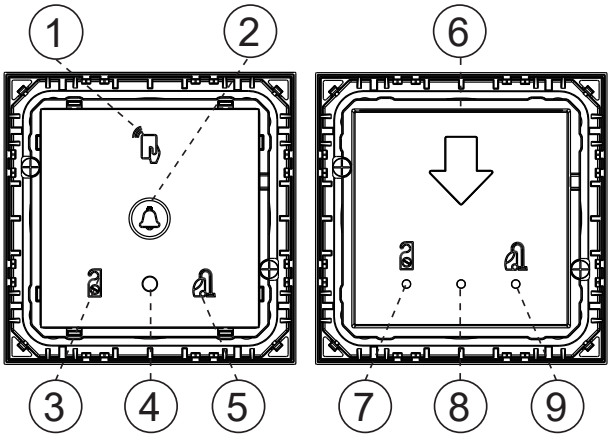

EK-TO2-TP EK-TI2-TP

No.	Model	Symbol	Description
1	EK-TO2-TP		RFID detector (non-backlit symbol)
2			Doorbell button/LED
3			DND button/LED
4			RGB LED for general functions
5			MUR button/LED
6	EK-TI2-TP		Card insertion slot
7			LED for DND signalling
8			LED for general signalling
9			LED for MUR signalling

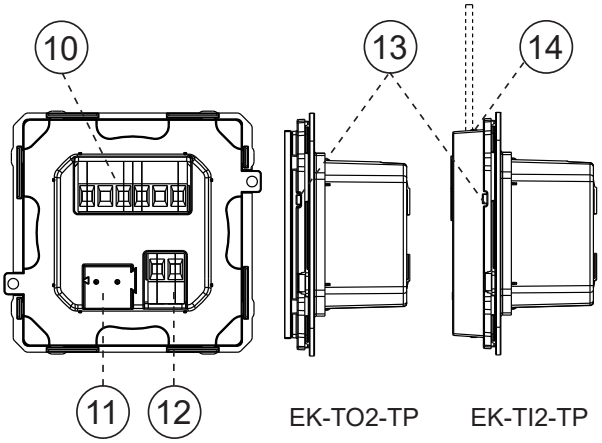

Nr.	Model	Description
10	EK-TO2-TP EK-TI2-TP	Relay outputs and digital inputs terminal
11		KNX bus terminal
12		Auxiliary power terminal
13		KNX programming button
14	EK-TI2-TP	Card insertion slot

Below is the terminal detail for inputs and outputs, for both devices.

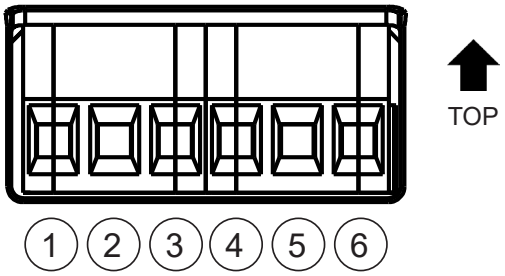

Nr.	Label	Description
1	COM	Common pole for outputs / relays
2	OUT1	Output / relay 1
3	OUT2	Output / relay 2
4	IN1	Input 1
5	IN2	Input 2
6	GND	Common pole for inputs

Mounting

The devices have an IP20 degree of protection and are therefore suitable for use in dry indoor environments, mounted in a flush-mounted box.

For the assembly of the devices, please carry out the following steps:

- Insert the metal support (c) on the adapter (b);
- Fasten the adapter-support assembly (c+b) by means of the pair of screws (d) on the wall-mounted flush-mounting box (a) provided with appropriate holes;
- insert the bus terminal, which was previously connected to the bus cable (see: “Connection to the KNX bus network”), into the appropriate slot on the back of the device (e);

- connect any digital inputs and relay outputs to the terminal on the back of the devices;
- Insert the device (e) into the holder-adapter assembly (c+b), observing the TOP indication (arrowhead pointing upwards) on the back;
- Screw the device (e) onto the support-adapter assembly (c+b) using the pair of screws (f) supplied;
- snap on the plate (g).

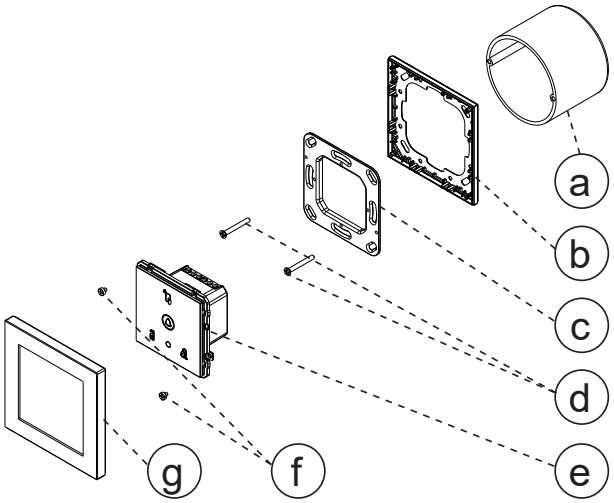

Mounting for EK-TO2-TP

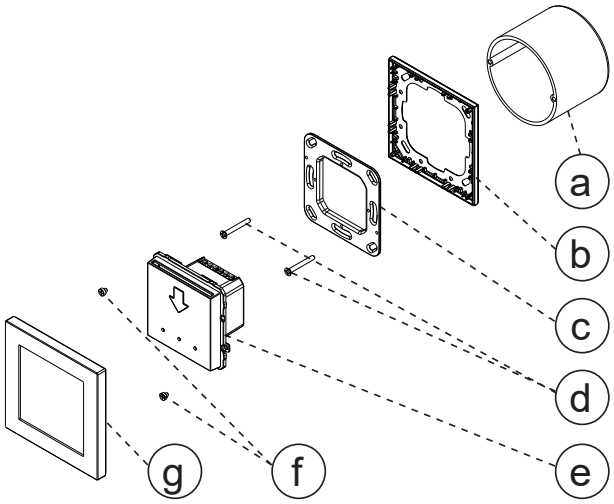

Mounting for EK-TO2-TP

a) Wall-recessed box for wall mounting
b) Square plate adapter (Deep series)
c) Metal mounting bracket
d) Fixing screws (for metal support)
e) Access control device (EK-TO2-TP or EK-TI2-TP)
f) Fixing screws (to fix the device)
g) Deep series square plate (to be ordered separately)

Note. *The screws for the mounting support must be tightened with a max. torque of 1.0 Nm.*

Warning! *The electrical connection of the device can be carried out only by qualified personnel. The incorrect installation may result in electric shock or fire. Before making the electrical connections, make sure the power supply has been turned off.*

Connection of the KNX bus line

The connection to the bus network takes place via the KNX terminal included in the delivery and inserted in the special housing located on the rear of the device in the lower part.

Characteristics of the KNX terminal block

- spring clamping of conductors
- 4 seats for conductors for each polarity
- terminal suitable for KNX bus cable with single-wire conductors and diameter between 0.6 and 0.8 mm
- recommended wire stripping approx. 5 mm
- color codification: red = + (positive) bus conductor, black = – (negative) bus conductor

Warning! *In order to supply the KNX bus lines use only KNX bus power supplies (e.g. ekinex EK-AH1-TP or EK-AM1-TP). The use of other power supplies can compromise the communication and damage the devices connected to the bus.*

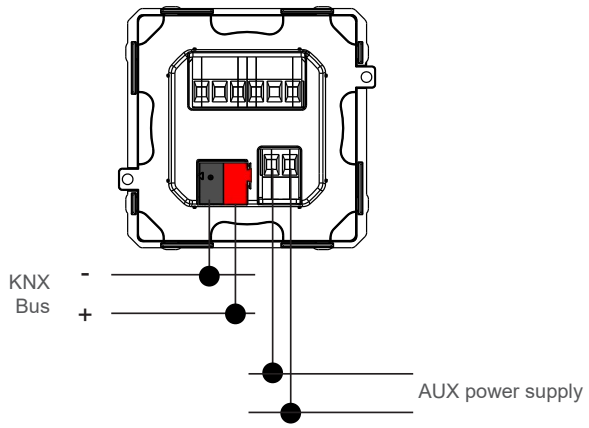

Warning! *When connecting the DC power supply, it is not necessary to polarize the connections as the device automatically sets the polarity.*

INSTALLATION TECHNICAL NOTES

- **Installation and maintenance must be performed only if the power supply has been turned off.**
- **Installation and maintenance must only be performed by qualified personnel in compliance with current regulations.**
- **Inside the switch cabinet where the power supplies are installed, it is recommended to install surge protection.**
- **The product must be protected by a suitably dimensioned circuit breaker on the main input line and possibly also by a suitably dimensioned fuse.**
- **The product must be installed in a vertical position with the faceplate/label facing frontwards or in a horizontal position with the faceplate/label facing upwards. No other installation positions of the product are permitted.**
- **The device is not grounded. Protection against accidental contact is provided by the enclosure.**
- **In the installation, keep the 90-230Vac circuits separate from the KNX bus**
- **It is absolutely forbidden to connect, for any reason, directly or indirectly, the mains voltage 90-230Vac to the KNX bus terminal or the load terminal.**

Connection to the auxiliary voltage

The connection to the auxiliary power supply is made via the terminals (12) at the rear of the devices.

Connection to input/output terminals

The connection to the digital inputs and relay outputs is made via terminal (10), located on the back of the devices.

Characteristics of clamps

- Screw tightening of conductors
- Max. conductor cross-section 2.5 mm^2
- Recommended conductor stripping approx. 6 mm
- Max. torque 0.5 Nm

Configuration and commissioning

Configuration and commissioning of the device require the use of the ETS® (Engineering Tool Software) program V5 or later releases. These activities must be carried out according to the design of the building automation system done by a qualified planner.

Note. *The configuration and commissioning of KNX devices require specialized skills. To acquire these skills, you should attend the workshops at KNX certified training centers. For more information, please visit www.knx.org website.*

Configuration

For the configuration of the device parameters the corresponding application program or the whole ekinex® product database must be loaded in the ETS program. For detailed information on configuration options, refer to the application manual of the device available on the website www.ekinex.com.

Note. *The physical address programming and automation functions are carried out using the ETS software. In order to realise the specific access control functions for the reader and holder pocket and for card programming, the ekinex® Accédo software must be used. For detailed information on the possibilities of using the Accédo programme, please refer to the application manual available at www.ekinex.com.*

Code	Application program (## = version)	Communication Objects (max. nr.)	Group addresses (max. nr.)
EK-TO2-TP	APEKTOTI2TP##.knxprod	335	254
EK-TI2-TP		328	254

Commissioning

The following activities are required for the commissioning of the device:

- Make the electrical connections as indicated above;
- supply voltage to the KNX bus;
- activate 12/24 Vac/dc auxiliary power supply
- Switch the device into programming mode by briefly pressing the appropriate button (13) on the right side of the device (looking at it from the front). In this operating mode, LED 4 or 8 (and possibly 2 for EK-TO2-TP) flashes briefly;
- download the physical address and configuration to the device via the ETS® program.

Note. *In contrast to other KNX devices, programming with ETS is only possible if both the bus power supply and the 12/24 Vac/dc auxiliary power supply are provided.*

At the end of the download, the device operation automatically returns to normal mode; in this operating mode the programming LED is off. The bus device is programmed and ready for operation.

Device reset

To reset the device, press and hold the programming button (13) for at least 10 seconds; then:

- for EK-TO2-TP, when the DND (3) and MUR (5) LEDs remain lit steadily, while the bell (3) and generic RGB (4) LEDs flash quickly in red, it means that the reset has been performed;
- for EK-TI2-TP, when the DND (7) and MUR (9) signal LEDs remain lit steadily, while the generic signal LED (8) flashes quickly in red, it means that the reset has been performed.

At this point it is necessary to re-address and configure the device using ETS.

Warning! *The reset restores the device back to the state of delivery from the factory. The address and the value of the parameters set during configuration will be lost.*

Dimensions [mm]

EK-TO2-TP (card reader)

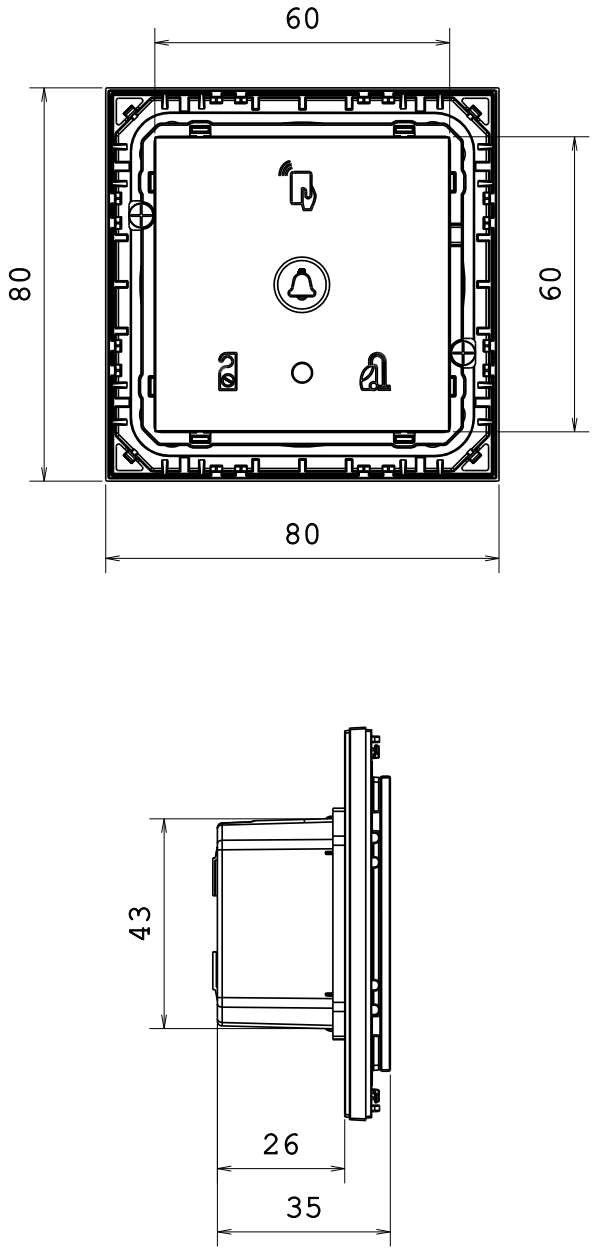

EK-TI2-TP (card holder pocket)

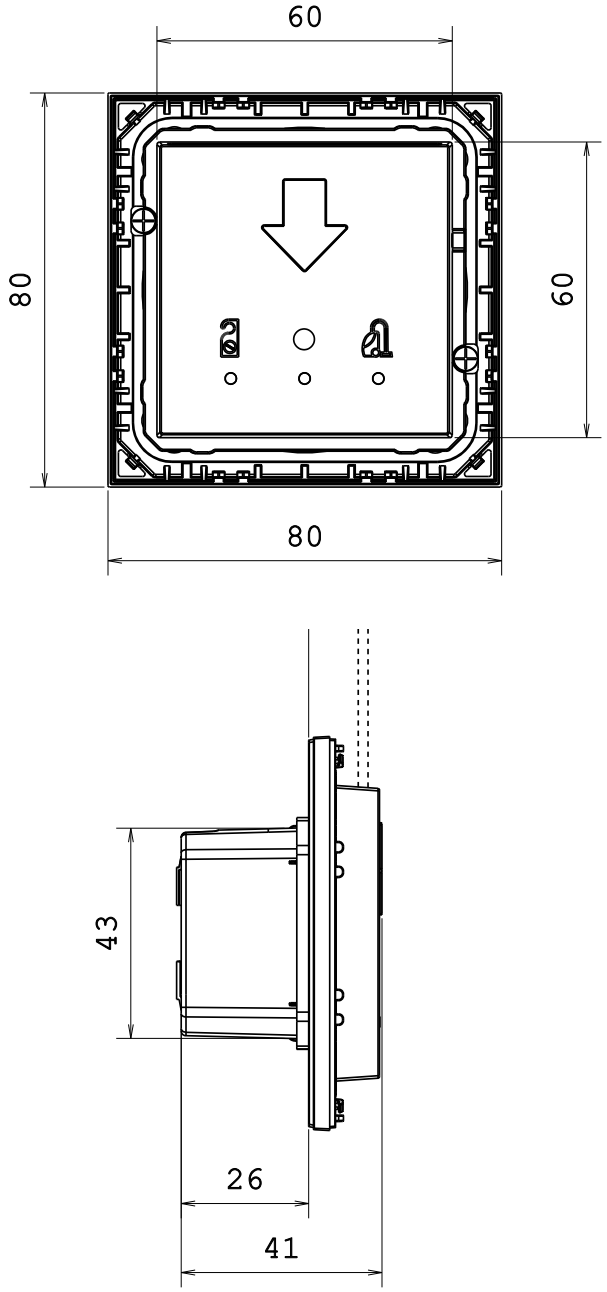

Marks

- KNX
- CE, UKCA: the device complies with the Low Voltage Directive (2014/35/EU) and the Electromagnetic Compatibility Directive (2014/30/EU). Tests carried out according to EN 63044-5-1:2019, EN 63044-5-2:2019.

Maintenance

The device is maintenance-free. To clean use a dry cloth. It must be avoided the use of solvents or other aggressive substances.

Disposal

At the end of its useful life the product described in this datasheet is classified as waste from electronic equipment in accordance with the European Directive 2012/19/EU (WEEE recast), and cannot be disposed together with the municipal undifferentiated solid waste.

Warning! *Incorrect disposal of this product may cause serious damage to the environment and human health. Please be informed about the correct disposal procedures for waste collecting and processing provided by local authorities.*

Documentation

This datasheet refers to the A1.0 release of ekinex® devices for access control, cod. EK-TO2-TP-... and EK-TI2-TP-... . It is available for download on the website www.ekinex.com in PDF format (Portable Data Format).

File name	Device release	Update
STEKTO2TI2TP_EN.pdf	A1.0	10 / 2026

Warnings

- Installation, electrical connection, configuration and commissioning of the device can only be carried out by qualified personnel in compliance with the applicable technical standards and laws of the respective countries
- Opening the housing of the device causes the immediate end of the warranty period
- In case of tampering, the compliance with the essential requirements of the applicable directives, for which the device has been certified, is no longer guaranteed
- ekinex® KNX defective devices must be returned to the manufacturer at the following address: EKINEX S.p.A. Via Novara 37, I-28010 Vaprio d'Agogna (NO) Italy

Other information

- This datasheet is aimed at installers, system integrators and planners
- For further information on the product, please contact the ekinex® technical support at the e-mail address: support@ekinex.com or visit the website www.ekinex.com
- Each ekinex® device has a unique serial number on the label. The serial number can be used by installers or system integrators for documentation purposes and has to be added in each communication addressed to the EKINEX technical support in case of malfunctioning of the device
- KNX® and ETS® are registered trademarks of KNX Association cvba, Brussels

© EKINEX S.p.A. The company reserves the right to make changes to this documentation without notice.